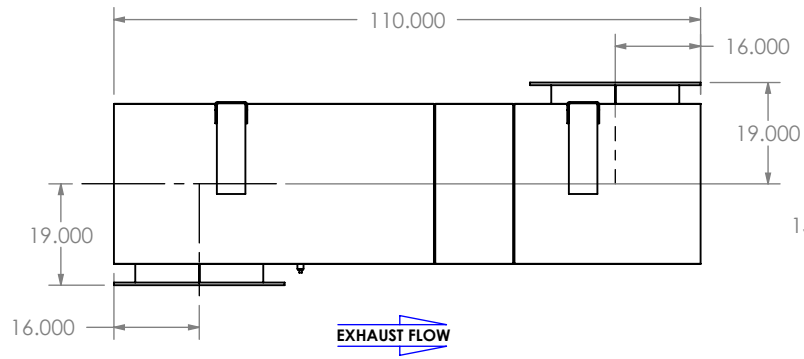

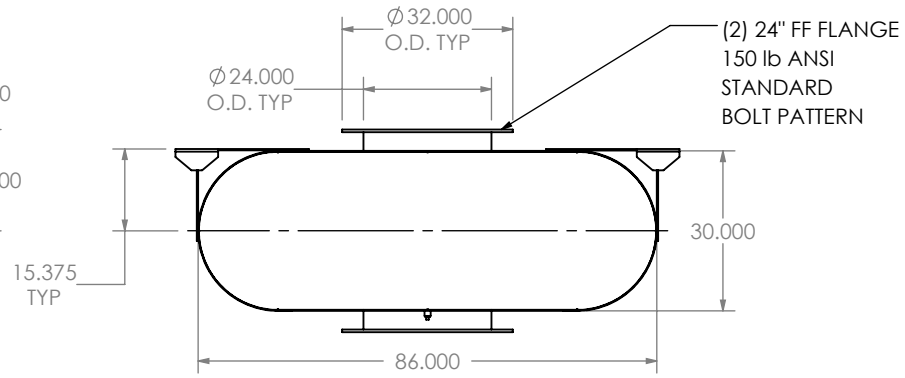

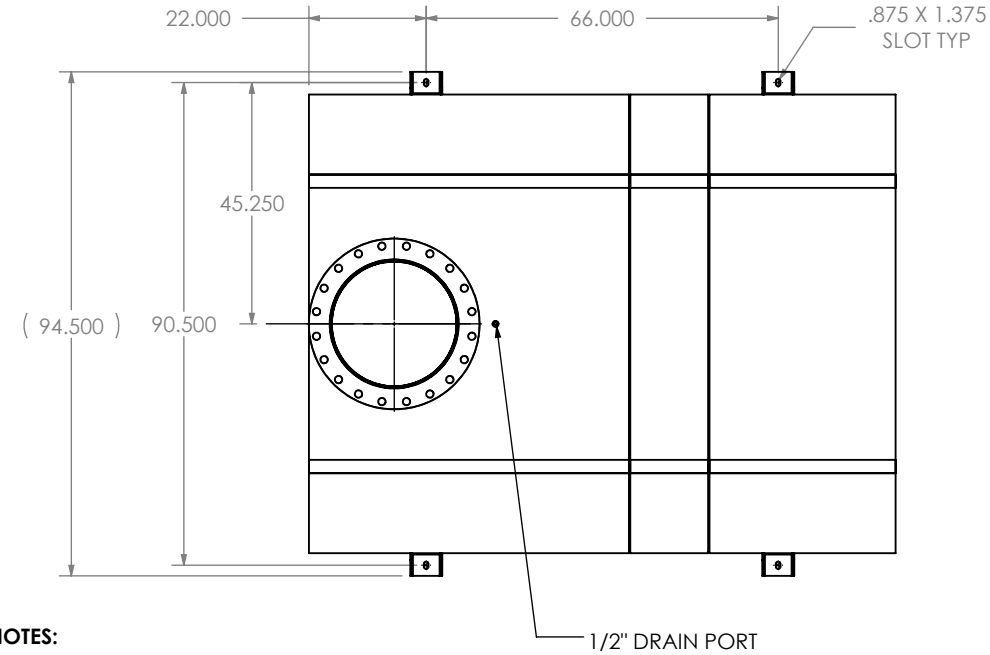

NOTES:

- DO NOT USE EQUIPMENT TO SUPPORT OTHER PARTS OF THE EXHAUST SYSTEM WITHOUT PROPER REINFORCEMENT

MATERIAL CONSTRUCTION:

- CARBON STEEL

PAINT:

- HIGH TEMPERATURE BLACK (MIRATECH COATING SYSTEM 5)

PROJECT NAME	**PROPRIETARY AND CONFIDENTIAL** THE INFORMATION CONTAINED IN THIS DRAWING IS THE SOLE PROPERTY OF MIRATECH GROUP, LLC. ANY REPRODUCTION IN PART OR AS A WHOLE WITHOUT THE WRITTEN PERMISSION OF MIRATECH GROUP, LLC IS PROHIBITED.	DIMENSIONS ARE IN INCHES UNLESS OTHERWISE SPECIFIED DIMENSIONAL TOLERANCES UNLESS OTHERWISE SPECIFIED ANGLES MACH: ±1° BEND: ±3° INCHES: ±0.125 MILLIMETERS: ±2 DO NOT SCALE DRAWING	MIRATECH / em PRODUCTS
PROPOSAL NUMBER			**OCBT0T-24PF-2-00003TVQ** **Sales Drawing**
SALES ORDER NO.		DRAWN FES / DATE 09/16/2016	DRAWING OCBT0T-24PF-2-00003TVQ SD / REV 0
CUSTOMER P.O.		REVIEWED BY AJM / DATE 09/30/2016	SIZE A / SCALE 1:36 / WEIGHT: 1838 lb / SHEET 1 OF 1