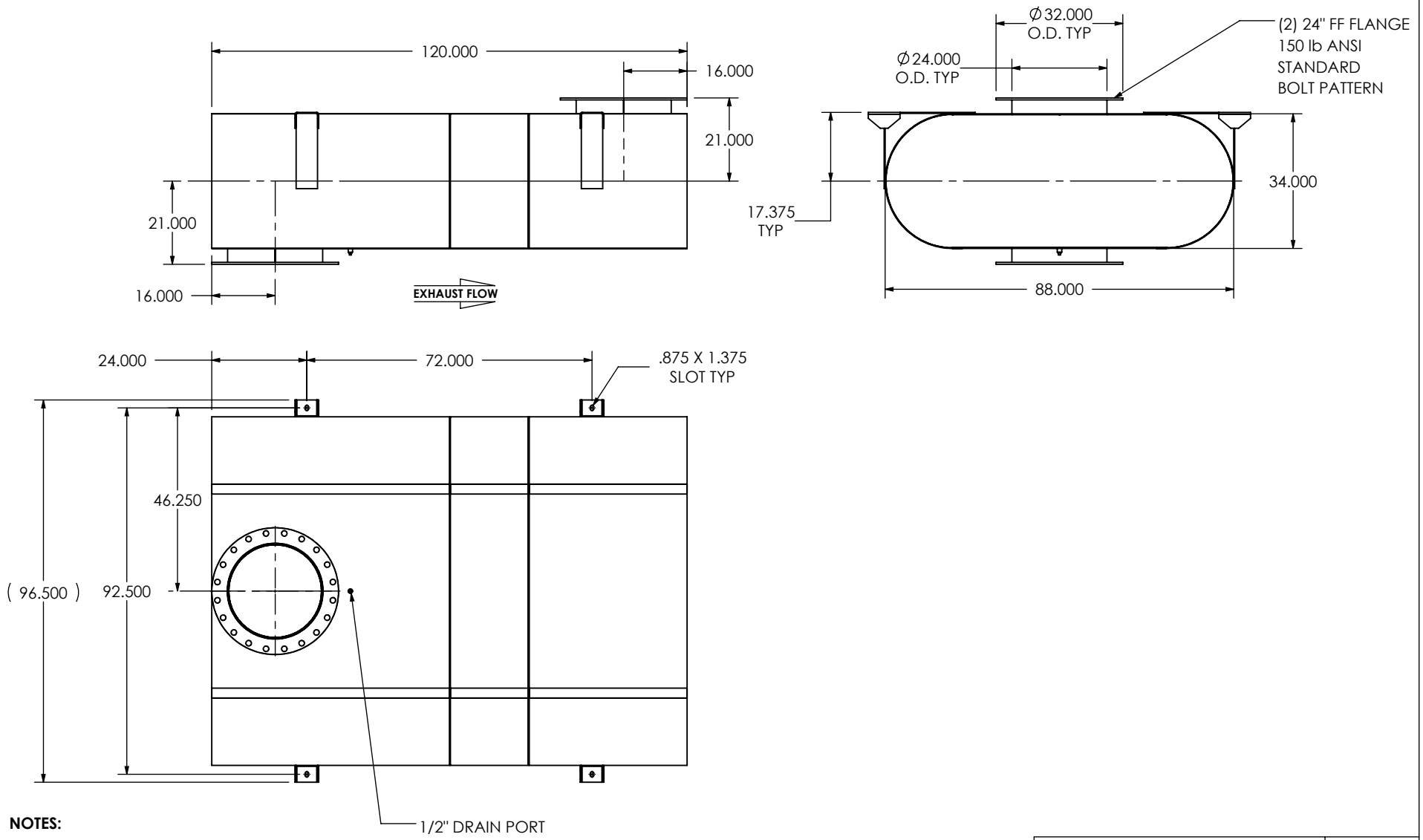

NOTES:

- DO NOT USE EQUIPMENT TO SUPPORT OTHER PARTS OF THE EXHAUST SYSTEM WITHOUT PROPER REINFORCEMENT

MATERIAL CONSTRUCTION:

- CARBON STEEL

PAINT:

- HIGH TEMPERATURE BLACK (MIRATECH COATING SYSTEM 5)

PROJECT NAME	
PROPOSAL NUMBER	
SALES ORDER NO.	
CUSTOMER P.O.	

PROPRIETARY AND CONFIDENTIAL

THE INFORMATION CONTAINED IN THIS DRAWING IS THE SOLE PROPERTY OF MIRATECH GROUP, LLC. ANY REPRODUCTION IN PART OR AS A WHOLE WITHOUT THE WRITTEN PERMISSION OF MIRATECH GROUP, LLC IS PROHIBITED.

DIMENSIONS ARE IN INCHES UNLESS OTHERWISE SPECIFIED

DIMENSIONAL TOLERANCES UNLESS OTHERWISE SPECIFIED
ANGLES
MACH: ±1° BEND: ±3°
INCHES: ±0.125 MILLIMETERS: ±2

DO NOT SCALE DRAWING

DRAWN FES	DATE 09/16/2016	DRAWING OSCBT2T-24PF-2-00003TVQ SD			REV 0
REVIEWED BY AJM	DATE 09/30/2016	SIZE A	SCALE 1:36	WEIGHT: 3056 lb	SHEET 1 OF 1

MIRATECH

em PRODUCTS®

OSCBT2T-24PF-2-00003TVQ
Sales Drawing