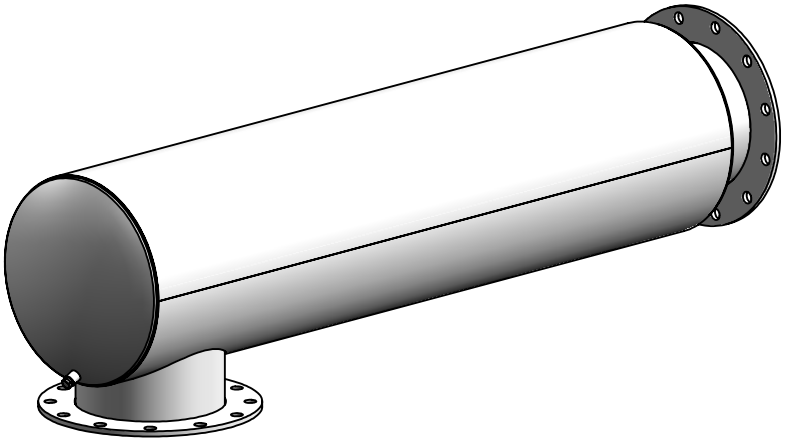

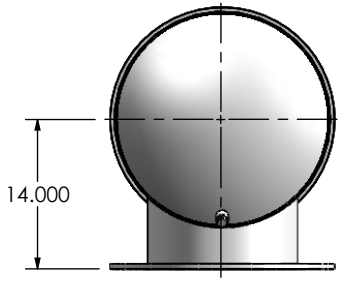

FRONT VIEW

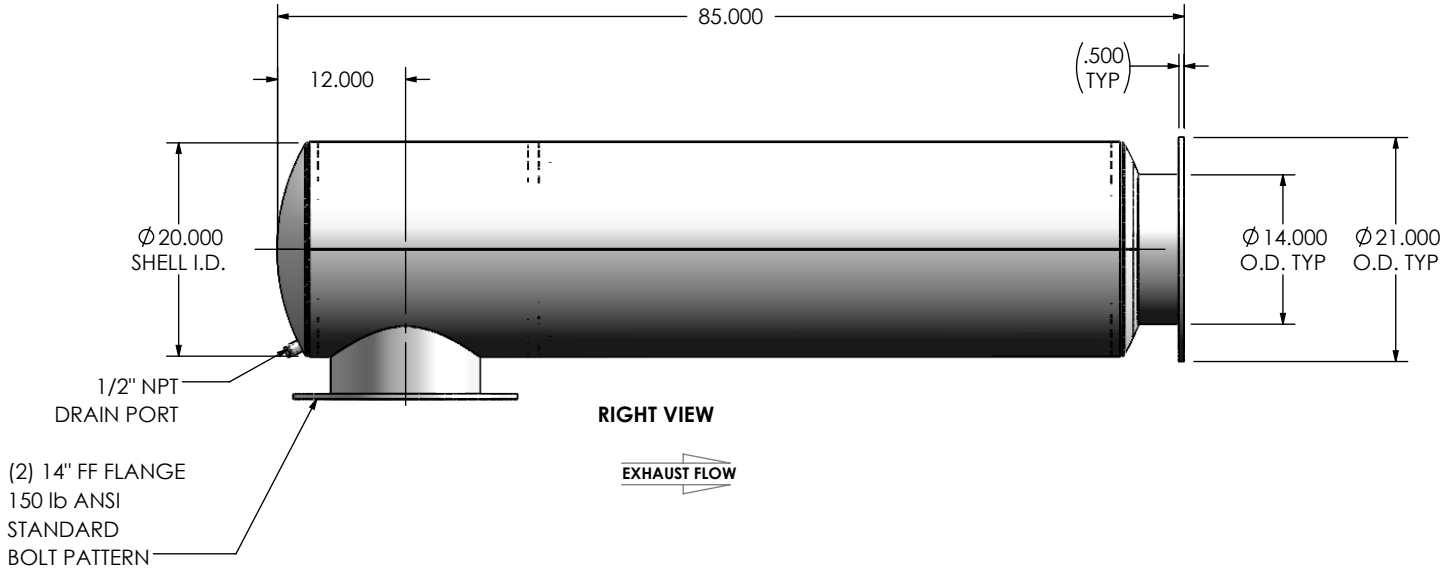

RIGHT VIEW

NOTES:

- DO NOT USE EQUIPMENT TO SUPPORT OTHER PARTS OF THE EXHAUST SYSTEM WITHOUT PROPER REINFORCEMENT

MATERIAL CONSTRUCTION:

- 304 STAINLESS STEEL

PAINT:

- NONE

PROJECT NAME	**PROPRIETARY AND CONFIDENTIAL** THE INFORMATION CONTAINED IN THIS DRAWING IS THE SOLE PROPERTY OF MIRATECH GROUP, LLC. ANY REPRODUCTION IN PART OR AS A WHOLE WITHOUT THE WRITTEN PERMISSION OF MIRATECH GROUP, LLC IS PROHIBITED.	DIMENSIONS ARE IN INCHES UNLESS OTHERWISE SPECIFIED DIMENSIONAL TOLERANCES UNLESS OTHERWISE SPECIFIED ANGLES MACH: ±1° BEND: ±3° INCHES: ±0.125 MILLIMETERS: ±2 DO NOT SCALE DRAWING	MIRATECH / em PRODUCTS
PROPOSAL NUMBER			**TRGEP-14PF-3-0000003F Sales Drawing**
SALES ORDER NO.		DRAWN JFS / DATE 08/04/2016	DRAWING TRGEP-14PF-3-0000003F SD / REV 0
CUSTOMER P.O.		REVIEWED BY / DATE 08/04/2016	SIZE A / SCALE 1:18 / WEIGHT: 270 lb / SHEET 1 OF 1