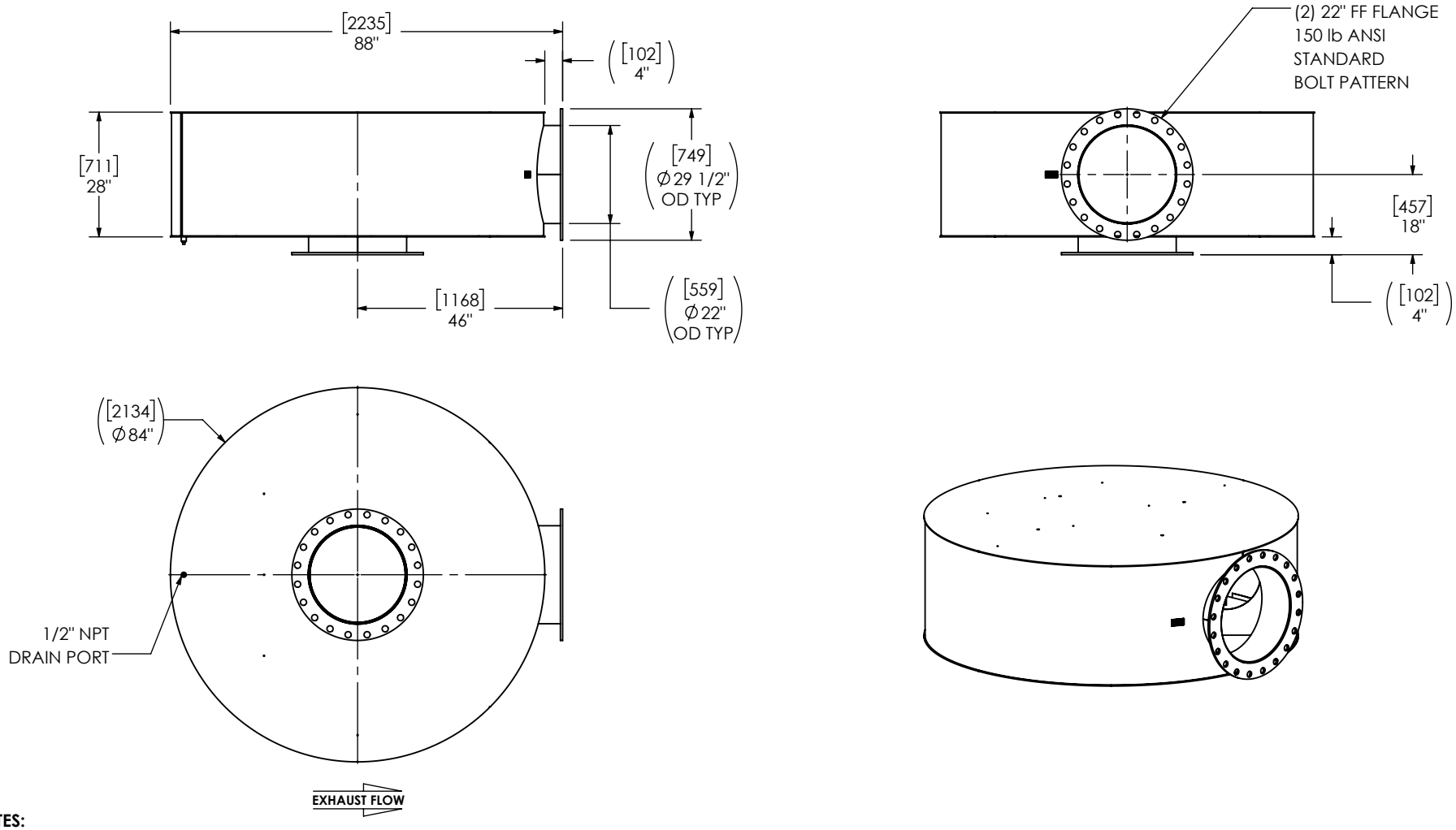

NOTES:

- DO NOT USE EQUIPMENT TO SUPPORT OTHER PARTS OF THE EXHAUST SYSTEM WITHOUT PROPER REINFORCEMENT

MATERIAL CONSTRUCTION:

- CARBON STEEL

PAINT:

- HIGH TEMPERATURE BLACK (MIRATECH COATING SYSTEM 5)

PROJECT NAME	**PROPRIETARY AND CONFIDENTIAL** THE INFORMATION CONTAINED IN THIS DRAWING IS THE SOLE PROPERTY OF MIRATECH. ANY REPRODUCTION IN PART OR AS A WHOLE WITHOUT THE WRITTEN PERMISSION OF MIRATECH IS PROHIBITED.	ALL DIMENSIONS IN INCHES [MILLIMETERS] UNLESS OTHERWISE SPECIFIED. CRITICAL DIMENSIONS ARE CIRCLED	MIRATECH MAXIM SILENCERS
PROPOSAL NUMBER		TOLERANCES UNLESS OTHERWISE SPECIFIED < 12 [305] ±1/8 [3] 12 [305] ≥ 36 [915] ±3/16 [5] 36 [915] ≥ 360 [9150] ±5/16 [9] > 360 [9150] ±7/16 [12] ANGULAR ±3° WEIGHT ±10%	**MD2BA0-22PF-2-0000C7K0** SILENCER RESIDENTIAL GRADE MD22
SALES ORDER NO.	PROJECTION	DRAWN SAG / DATE 03/12/2024	SALES DRAWING MD2BA0-22PF-2-0000C7K0 SD OEM NO / REV 0
CUSTOMER P.O. [P.N.]		REVIEWED CSF / DATE 03/12/2024	SIZE A / DO NOT SCALE / SCALE 1:35 / WEIGHT 1075lb/489kg / SHEET NO. 1 OF 1